This article was downloaded by: *[Silverberg, Larry M.]*
On: *10 September 2008*
Access details: *Access Details: [subscription number 902342833]*
Publisher *Routledge*
Informa Ltd Registered in England and Wales Registered Number: 1072954 Registered office: Mortimer House, 37-41 Mortimer Street, London W1T 3JH, UK

Journal of Sports Sciences
Publication details, including instructions for authors and subscription information:
http://www.informaworld.com/smpp/title~content=t713721847

Optimal release conditions for the free throw in men's basketball

Chau M. Tran [a]; Larry M. Silverberg [a]
[a] Mechanical and Aerospace Engineering, North Carolina State University, Raleigh, North Carolina, USA

First Published:September2008

To cite this Article Tran, Chau M. and Silverberg, Larry M.(2008)'Optimal release conditions for the free throw in men's basketball',Journal of Sports Sciences,26:11,1147 — 1155
To link to this Article: DOI: 10.1080/02640410802004948
URL: http://dx.doi.org/10.1080/02640410802004948

PLEASE SCROLL DOWN FOR ARTICLE

Full terms and conditions of use: http://www.informaworld.com/terms-and-conditions-of-access.pdf

This article may be used for research, teaching and private study purposes. Any substantial or systematic reproduction, re-distribution, re-selling, loan or sub-licensing, systematic supply or distribution in any form to anyone is expressly forbidden.

The publisher does not give any warranty express or implied or make any representation that the contents will be complete or accurate or up to date. The accuracy of any instructions, formulae and drug doses should be independently verified with primary sources. The publisher shall not be liable for any loss, actions, claims, proceedings, demand or costs or damages whatsoever or howsoever caused arising directly or indirectly in connection with or arising out of the use of this material.

Journal of Sports Sciences, September 2008; 26(11): 1147–1155

Routledge
Taylor & Francis Group

Optimal release conditions for the free throw in men's basketball

CHAU M. TRAN & LARRY M. SILVERBERG

Mechanical and Aerospace Engineering, North Carolina State University, Raleigh, North Carolina, USA

(Accepted 21 February 2008)

Abstract

The purpose of this study was to determine the optimum release conditions for the free throw in men's basketball. The study used hundreds of thousands of three-dimensional simulations of basketball trajectories. Five release variables were studied: release height, release speed, launch angle, side angle, and back spin. The free throw shooter was assumed to shoot at 70% and to release the ball 2.134 m (7 ft) above the ground. We found that the shooter should place up to 3 Hz of back spin on the ball, should aim the ball towards the back of the ring, and should launch the ball at 52° to the horizontal. We also found that it is desirable to release the ball as high above the ground as possible, as long as this does not adversely affect the player's launch consistency.

Keywords: *Basketball, free throw, dynamics, release conditions*

Downloaded By: [Silverberg, Larry M.] At: 00:08 10 September 2008

Introduction

Many basketball games are won or lost at the free throw line, so shooting consistently is an important part of the game. Most players perform many sessions of shooting drills so as to develop a consistent shooting technique. Initially, however, the player needs to focus on understanding the best release conditions. At what angle should the ball be released, and where should the ball be aimed? How much back spin should be imparted to the ball, and is there an advantage in releasing the ball higher above the ground?

The optimal release conditions in free throw shooting are not obvious because they are interrelated. For example, the release height of the ball influences the optimal launch angle, and the optimal launch angle influences where to aim. Because of the large number of factors involved, a great many free throws must be studied to gain a full understanding of the optimal release conditions. Studying the optimal release conditions through systematic experimentation with players would be extremely time-consuming. A realistic alternative is to investigate the optimal release conditions through computer simulations, where many more shots can be investigated in a much shorter time.

Previous simulation studies of basketball free throw trajectories were based on analytical methods. Most studies assumed planar motion, and only simple interactions of the basketball with the backboard and the ring could be treated. Shibukawa (1975), Brancazio (1981), Tan and Miller (1981), Hamilton and Reinschmidt (1997), and Huston and Grau (2003) are the main contributors. Okubo and Hubbard (2006) handled dynamic interactions of the basketball with the backboard and the ring by patching together slipping and rolling solutions. A numerical method that systematically handles all of the possible basketball interactions with the backboard and ring was developed by Silverberg and colleagues (Silverberg, Tran, & Adcock, 2003). These authors also developed a general procedure for obtaining statistical probabilities of basketball shots from the statistical characteristics of a shooter's release conditions. This study, which is based on that procedure, develops the optimal release conditions for the free throw.

Methods

We performed numerical simulations of basketball free throw trajectories using a model developed by Silverberg *et al.* (2003). The model accounts for the

Correspondence: L. M. Silverberg, Mechanical and Aerospace Engineering, North Carolina State University, Raleigh, NC 27695-7910, USA.
E-mail: lmsilver@ncsu.edu

ISSN 0264-0414 print/ISSN 1466-447X online © 2008 Taylor & Francis
DOI: 10.1080/02640410802004948

Downloaded By: [Silverberg, Larry M.] At: 00:08 10 September 2008

interactions of the basketball with the backboard and the ring, but neglects three secondary effects. In order of decreasing importance, the secondary effects are: vibration of the backboard and ring; aerodynamic drag and Magnus force on the ball; and the bridge surface between the backboard and hoop.

The dimensions of the court, backboard, and ring that influence the free throw are the same for international competition (International Basketball Federation, 2006), US college competition (National Collegiate Athletic Association, 2001), and US professional competition (National Basketball Association, 2006). However, the conclusions reached in the present study only apply to men's basketball, because in women's basketball the ball is smaller and lighter. (although the dimensions of the court are the same).

Figure 1 shows that the ball is released from a particular point $(x\ y\ z)$ in space with a release speed v, a launch angle α, and a side angle β. The shooter also imparts to the ball a back spin ω about an axis that is perpendicular to the plane of the ball's approach to the basket. Out-of-plane components of back spin can be imparted too, but their effects are neglected because of their small magnitude. Referring again to Figure 1, we assume that the shooter releases the ball from the centre of the free throw line at $(x,\ y) = (4.191,\ 0)$ m. This leaves five release variables to examine: z, v, α, β, and ω. The shooter only prescribes the release variables approximately, so they are statistical.

The shooter's ultimate success depends on two factors. The first is his understanding of the desired shot. Of course, the shooter's desired shot is not necessarily the optimal one. The second factor is the player's consistency. The actual shot will deviate from the desired shot because of the inevitable variability in his shooting movement pattern. The selection of the desired shot and the standard deviations in the launch conditions completely determine the chances of a shot being successful.

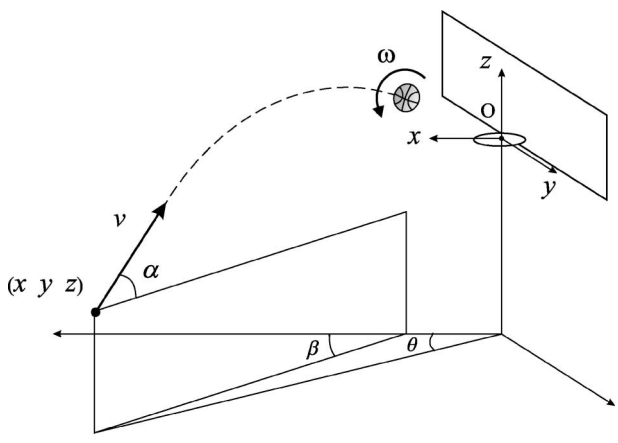

Figure 1. Release conditions for a basketball free throw.

In this study, we assumed that a typical basketball shooter is 1.981 m (6 feet 6 inches) tall and releases the ball 0.152 m (6 inches) above his head. The release height was therefore set to 2.133 m (7 feet) above the ground. Furthermore, we assumed, unless otherwise stated, that the side angle, β, is zero and that the shooter imparts 3 rev $\cdot$ s^{-1} (3 Hz) of back spin. The reason for imparting this amount of back spin is justified later. The remaining two release conditions, v and α, were treated as statistical. Figure 2 shows the v and α for successful free throws. As shown, the regions of successful shots divide into bands. From left to right, there is a thick band, two thin bands, a thick band, and a thin band. The left thick band comprises "hoop shots", the two middle thin bands are "bridge shots", and the right thick and thin bands are "bank shots". To gain a better appreciation of the different types of shots represented, look at shots 1–9 depicted around the figure. The trajectories shown are the centre-lines of the basketball. Referring to Figure 2, shots 1–9 were taken at 52°, which is also the desired launch angle that later is determined to give the highest probability of a successful shot. Approximations of these results were obtained by Hamilton and Reinschmidt (1997).

The NCAA Division I free throw shooting average was 69.1% in the 2006 season. The simulations performed in this study treated a shooter who shoots at 70%. The standard deviations σ_v and σ_α of his release speed and launch angle were needed for the simulations. To find σ_v and σ_α, we began by assuming that the desired release speed and desired launch angle are $v = 7.19$ m $\cdot$ s^{-1} and $\alpha = 52°$, and we examined two extreme situations. (Later, we will show that $v = 7.19$ m $\cdot$ s^{-1} is optimal.) First, we let σ_v be very small, essentially zero, and determined that $\sigma_\alpha = 6.19°$ gives a 70% free throw (case 1). Then, we let σ_α be very small, essentially zero, and determined that $\sigma_v = 0.115$ m $\cdot$ s^{-1} gives a 70% free throw (case 2). In case 1, $\sigma_\alpha = 6.19°$ corresponds to shooting within $\pm 10.3°$, 90% of the time; and in case 2, $\sigma_v = 0.115$ m $\cdot$ s^{-1} corresponds to shooting within ± 0.229 m $\cdot$ s^{-1}, 90% of the time. The $\pm 10.3°$ in case 1 is a large percentage of the possible launch angles (about 46%), whereas the ± 0.229 m $\cdot$ s^{-1} in case 2 is a significantly smaller percentage of the possible release speeds (about 6%), and so requires a correspondingly higher level of skill. This result shows that the free throw is considerably less sensitive to errors in the desired 52° launch angle, and therefore is dominated by the sensitivity of the 7.19 m $\cdot$ s^{-1} desired release speed. Analytical results support this hypothesis (Brancazio, 1981; Tan & Miller, 1981). In the present study, the standard deviation of the launch angle, because of its

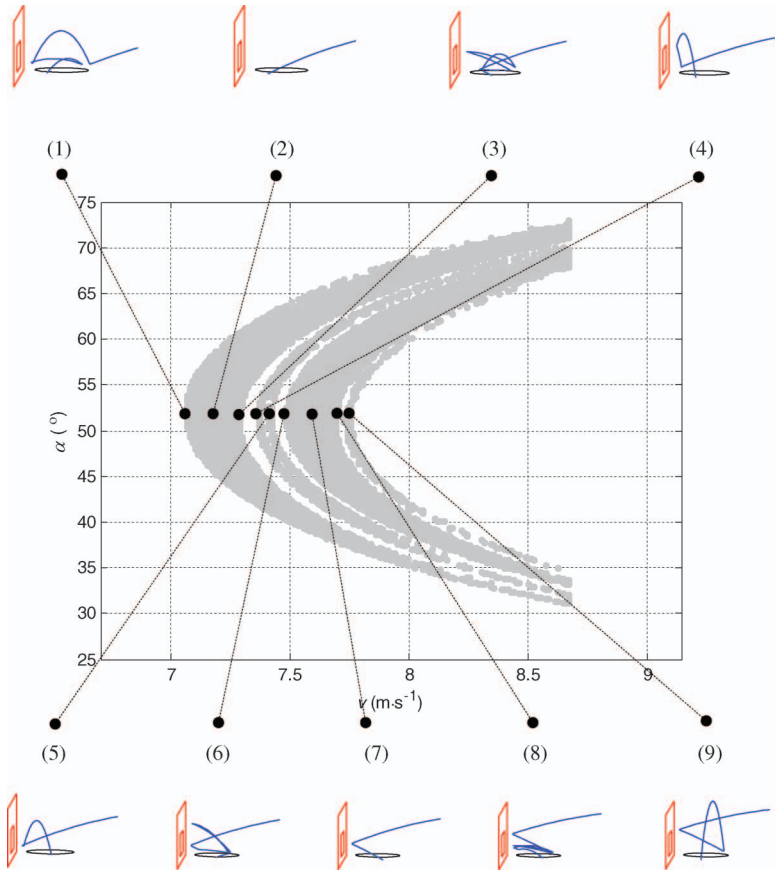

Figure 2. Release speed versus launch angle for successful shots ($\omega = 3$ Hz).

comparatively small effect on the free throw's probability, was set to zero. The Results section shows quantitatively that the effect of the launch angle on the probability of a successful shot is very small.

To find the optimal release conditions in free throw shooting, we examined back spin, where to aim, the desired launch angle, the release height, and the effect of the side angle.

In free throw shooting, back spin usually deadens the motion of a basketball after it bounces off of a ring (Brancazio, 1981) and tends to cause the basketball to bounce lower off the backboard. Both effects cause the basketball to stay closer to the ring after a bounce, which increases the probability of a successful shot. Of course, the amount of back spin that can be imparted is limited. Based on our own shooting experience, it is difficult for a shooter to impart more than 3 Hz of back spin without it adversely affecting the consistency of the launch. To determine the optimal back spin, the release speeds and launch angles for successful free throws were examined for back spins ranging from $\omega = 0$ Hz to $\omega = 5$ Hz. The probabilities were expressed as functions of the desired release speeds for a given back spin. This allowed the desired release speed that gives the greatest probability of a successful shot to be determined. This examination also allowed us to find out where the player should aim the ball. The desired location of the basketball as it passes through the ring was determined from the corresponding desired release speed and the desired launch angle previously found.

We also examined how the optimal release conditions are affected by release height. The simulations were repeated for heights between 1.676 m (5.5 feet) and 2.286 m (7.5 feet). The data were then examined to determine how the release height affects the optimal launch angle, the optimal release speed, and ultimately the optimal probability of a successful shot. In these simulations, the side angle was assumed to be zero. We also examined how the side angle affects the probability of a successful shot. As suggested by Hamilton and Reinschmidt (1997), the side angle effect can only be understood through a three-dimensional analysis because of competing effects. Our simulations did not treat the side angle as statistical, and therefore neglected the decrease in consistency of side angle with increasing launch angle. Instead, the side angle effect was studied by first looking at the successful shots as a function of release speed and launch angle

Downloaded By: [Silverberg, Larry M.] At: 00:08 10 September 2008

for different side angles. Side angles up to 1.62° were examined. (A 1.62° side angle corresponds to a trajectory that intersects the y–z plane with a y-offset of 0.118 m or half the radius of the ring.)

Results

The results presented here confirm trends anticipated by Shibukawa (1975), Brancazio (1981), Tan and Miller (1981), Hamilton and Reinschmidt (1997), Silverberg *et al.* (2003), and Okubo and Hubbard (2006). New results were also found, including the precise point towards which the shooter should aim the ball, the optimum amount of back spin to impart to the ball, and a more complete understanding of the three-dimensional effects of side angle.

Back spin

Figures 3 and 4 show release speed versus launch angle for $\omega = 0$ Hz and $\omega = 5$ Hz ($\omega = 3$ Hz is shown in Figure 2). Note how the thicknesses of the bands change as back spin increases. The separate thin and thick bands on the left for $\omega = 0$ join together when the back spin reaches $\omega = 3$ Hz. The thickness of the thick band on the left is smallest when $\omega = 0$, but its thickness when $\omega = 3$ Hz is the same as its thickness when $\omega = 5$ Hz because the thin band had already joined together with the thick band. Also note that when $\omega = 0$, there is no thin band to the right of the thick band on the right. But when $\omega = 3$ Hz, a new thin band appears to the right of the thick band on the right. When $\omega = 5$ Hz, the thick band on the right becomes even thicker. These trends show that the number of successful hoop shots increases from $\omega = 0$ Hz to $\omega = 3$ Hz (beyond which it levels off), and that the number of successful bank shots increases from $\omega = 0$ Hz to $\omega = 5$ Hz. These curves and similar curves for $\omega = 1$ Hz, $\omega = 2$ Hz, and $\omega = 4$ Hz (not presented) show that of these five back spins, $\omega = 3$ Hz may be the best for the hoop shot, and that the highest back spin that a shooter can impart without it adversely affecting his consistency may be the best for the bank shot. To confirm these conclusions, a more detailed study of probabilities was conducted.

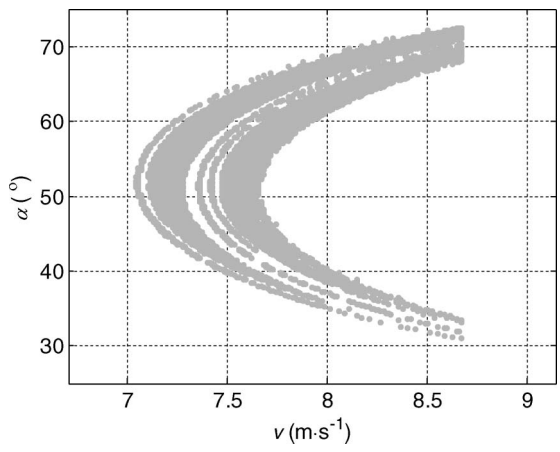

Figure 3. Release speed versus launch angle for successful shots ($\omega = 0$ Hz).

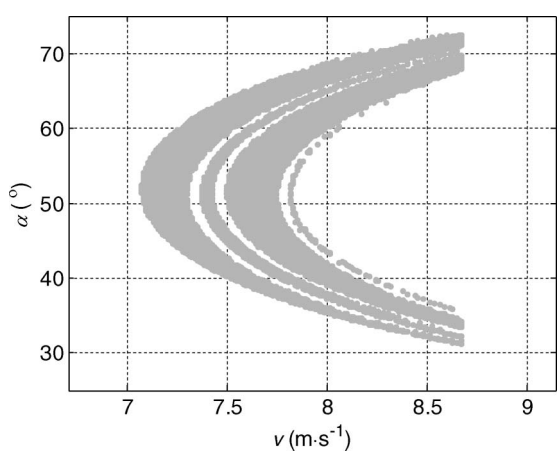

Figure 4. Release speed versus launch angle for successful shots ($\omega = 5$ Hz).

Figures 2, 3, and 4 were used to calculate the probability of a successful free throw. The shape of the shaded regions in these figures indicates that the optimal desired launch angle is about 52°. The optimal desired release speed depends on whether the shooter attempts a hoop shot or a bank shot. One would expect the optimal desired release speed for a hoop shot to be in the middle of the thick band on the left, and the optimal desired release speed for a bank shot to be in the middle of the thick band on the right.

Figure 5 shows the probability of a successful shot versus desired release speed. Each curve has two maxima; the left maximum is associated with hoop shots, and the right maximum is associated with bank shots. From Figure 5 and from similar curves for $\omega = 1$ Hz, $\omega = 2$ Hz, and $\omega = 4$ Hz (not presented), we conclude that the probabilities associated with the left maximum reaches a plateau when the back spin reaches 3 Hz. This confirms that placing 3 Hz of back spin on the basketball is near optimal for a hoop shot. On the other hand, the probability of the bank shot increases well beyond 3 Hz. This is consistent with the trend observed in the previous section that the number of successful shots increases with increasing back spin. In fact, we see in Figure 5 that the highest probability bank shot is larger than the highest probability hoop shot when the back spin is 5 Hz, disregarding the difficulty of placing large amounts of back spin on a basketball. This result was also found by Shibukawa (1975).

Downloaded By: [Silverberg, Larry M.] At: 00:08 10 September 2008

Downloaded By: [Silverberg, Larry M.] At: 00:08 10 September 2008

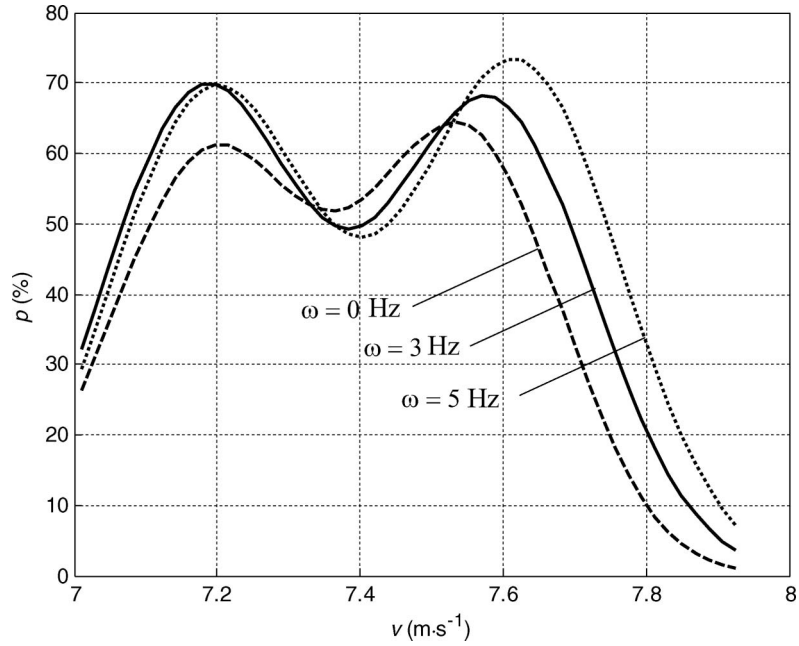

Figure 5. Probability of a successful shot versus desired release speed for backspins of $\omega = 0$ Hz, 3 Hz, and 5 Hz ($\alpha = 52^\circ$, $\sigma_v = 0.115\ \mathrm{m \cdot s^{-1}}$).

Where to aim

Figure 6 shows, for the left maximum at 3 Hz of back spin, that the basketball passes through the ring 7.2 cm behind the centre of the ring. This is the best point towards which a shooter should aim the ball. For this shot, the gap between the ball and the back of the ring is 4.5 cm, and the gap between the ball and the front of the ring is 18.8 cm. Note that if the shooter aims towards the centre of the ring, the probability of his shot decreases by 2.6% (from 70% to 67.4%). If the release conditions had not been optimal, then aiming towards the centre of the ring would have decreased the shooter's shooting percentage by a greater amount. It follows that selecting the correct aiming point is important in producing a successful free throw.

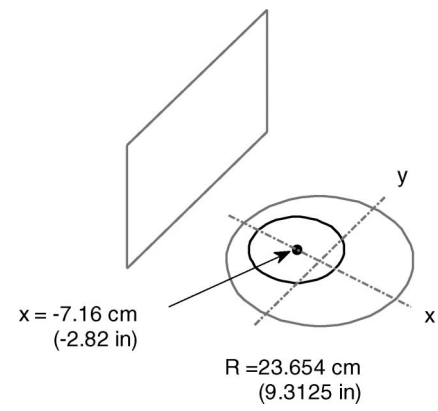

Figure 6. Optimal aiming point for maximum probability of a successful shot.

Launch angle

Figure 7 shows the probability of a successful shot versus the desired release speed for desired launch angles of 47°, 52°, 57°, and 62°. The maximum probabilities and the corresponding desired release speeds are as follows: 64% and 7.25 $\mathrm{m \cdot s^{-1}}$ for $\alpha = 47^\circ$; 71% and 7.19 $\mathrm{m \cdot s^{-1}}$ for $\alpha = 52^\circ$; 74% and 7.28 $\mathrm{m \cdot s^{-1}}$ for $\alpha = 57^\circ$; and 74% and 7.53 $\mathrm{m \cdot s^{-1}}$ for $\alpha = 62^\circ$. Figure 7, along with similar figures for intermediate launch angles (not presented), show that for launch angles above $\alpha = 52^\circ$, the maximum probability is relatively insensitive to the desired launch angle, and that the lowest corresponding desired release speed is in the neighbourhood of $\alpha = 52^\circ$. To produce Figure 7, the standard deviation in the release speed was assumed to be constant. In shooters who lose consistency as the desired release speed increases, $\alpha = 52^\circ$ is the optimal launch angle. On the other hand, for shooters who release the ball more consistently at higher speeds, it is best to shoot at higher launch angles. Shooting flat (i.e. using a launch angle below 52°) also increases the optimal desired release speed; however, this also decreases the probability of a successful shot. To gain an appreciation for the sensitivity of v, our calculations revealed that shooting at 7.01 $\mathrm{m \cdot s^{-1}}$ is equivalent to stepping back 0.152 m (6 inches) and shooting at 7.32 $\mathrm{m \cdot s^{-1}}$.

The launch angle also affects the optimal aiming point. For $\alpha = 47^\circ$, the best point is $x = 9.1$ cm

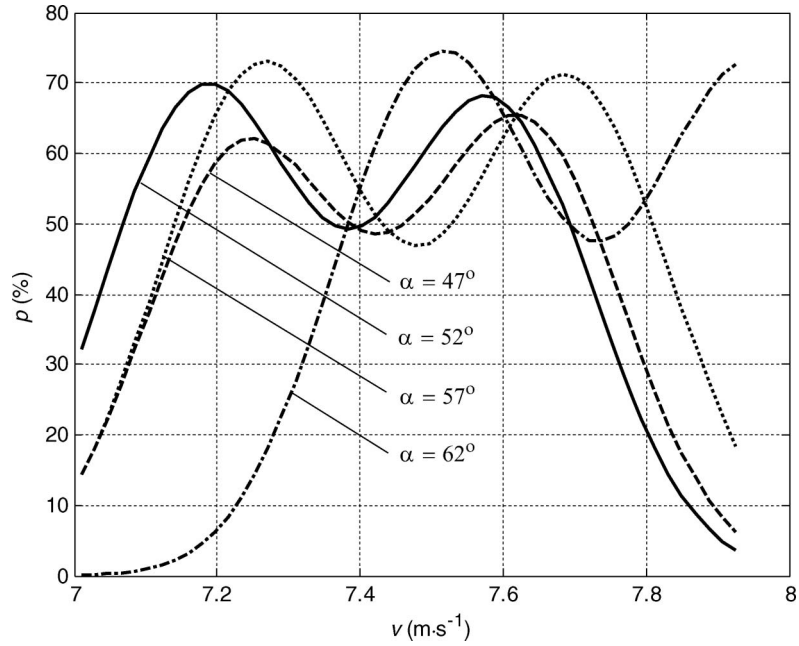

Figure 7. Probability of a successful shot versus desired release speed for launch angles of $\alpha = 47°$, $52°$, $57°$, and $62°$ ($\omega = 3$ Hz, $\sigma_v = 0.115\ \mathrm{m \cdot s^{-1}}$).

Downloaded By: [Silverberg, Larry M.] At: 00:08 10 September 2008

beyond the centre of the ring; for $\alpha = 52°$, the best point is $x = 7.2$ cm beyond centre (as stated previously); for $\alpha = 57°$, the best point is $x = 4.0$ cm beyond centre; and for $\alpha = 62°$, the best point is $x = 2.9$ cm beyond centre.

Release height

The effect of the release height on the optimal desired launch angle, the optimal release speed, and the probability of a successful shot are shown in Figure 8. Recall that $\sigma_v = 0.115\ \mathrm{m \cdot s^{-1}}$ had so far been assumed to be constant. In practice, most shooters probably release the ball less accurately at higher speeds. That is, σ_v increases as v increases. We now find that the launch angle decreases by about 1°, and the optimal release speed decreases by about $0.12\ \mathrm{m \cdot s^{-1}}$, with each 0.152 m (6 inches) increase in release height. The probability of a successful shot increases by about 5% with each 0.152 m increase in release height above 1.981 m (6.5 feet). As shown, larger release heights improve the probability of a successful shot. Because release speed decreases as the release height increases, and because σ_v was taken to be constant, it follows that for most shooters the results presented here are conservative. Interestingly, there is a widely held belief that taller shooters are at a disadvantage over shorter shooters at the free-throw line, but our results agree with the conclusion arrived at by Brancazio (1981) that the opposite is true.

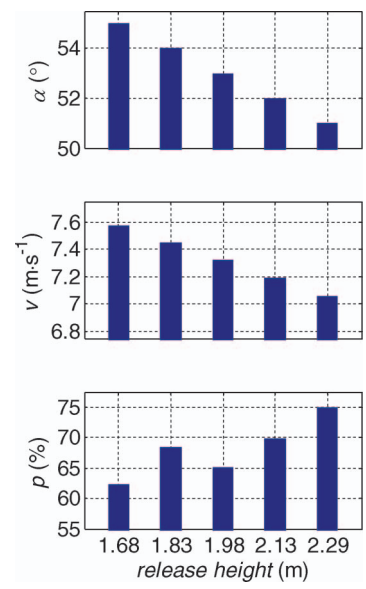

Figure 8. The effect of release height on (a) optimal launch angle, (b) optimal release speed, and (c) optimal probability of a successful shot (1.68 m = 5.5 feet, 1.83 m = 6.0 feet, 1.98 m = 6.5 feet, 2.13 m = 7.0 feet, 2.29 m = 7.5 feet).

Side angle

Figure 9 shows successful shots with a side angle of $\beta = 1.62°$. In this graph, shots 0 to 4 are hoop shots taken at 52° at increasing speeds. Shot 1 hits the front side of the ring (compare it with shot 1 in Figure 2), shot 2 nicks the inner side of the ring (compare it with shot 2 in Figure 2), and shot 3 hits the back side of the ring (compare it with shot 3

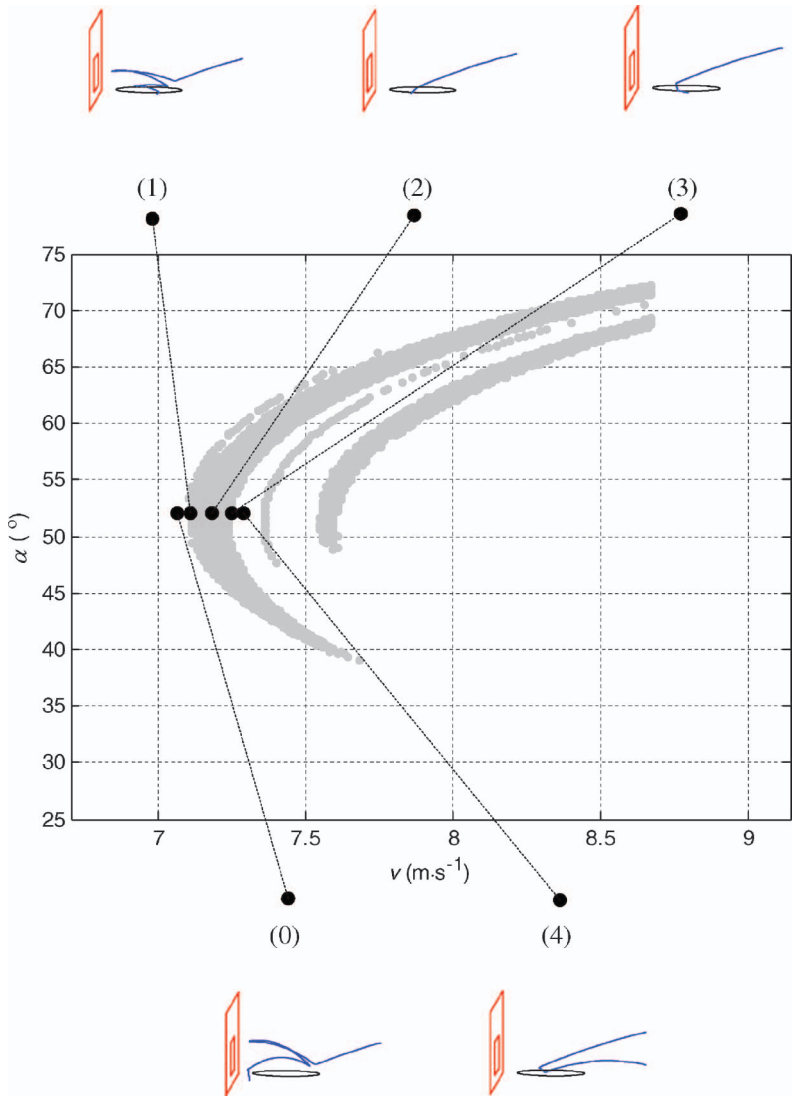

Figure 9. Release speed versus launch angle for successful shots ($\beta = 1.62°$ and $\omega = 3$ Hz).

Downloaded By: [Silverberg, Larry M.] At: 00:08 10 September 2008

in Figure 2). Shot 0, which was taken at a slightly lower speed than shot 1, and shot 4, which was taken at a slightly higher speed than shot 3, are both unsuccessful. These results indicate that at $\beta = 1.62°$ the shot will be successful only when the ball makes contact with the ring.

In general, the set of successful shots for a given β are contained in the set of successful shots for a lower value of β. The release speeds and launch angles of successful shots for $\beta = 0°$, $0.81°$, and $1.62°$ are shown in Figure 10. The overlaid data show that all of the successful shots for $\beta = 1.62°$ are also successful for $\beta = 0.81°$, and that all of the successful shots for $\beta = 0.81°$ are also successful for $\beta = 0°$. Also, as β increases the unsuccessful shots are located around the perimeter of the bands, and the thicknesses of the gaps on the left sides of the bands and the right sides of the bands are about the same

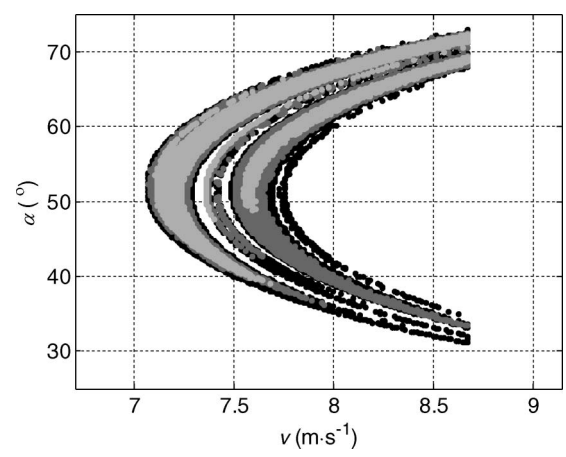

Figure 10. Release speed versus launch angle for successful shots ($\omega = 3$ Hz) for side angles of $\beta = 0°$ (black), $0.81°$ (dark grey), and $1.62°$ (light grey).

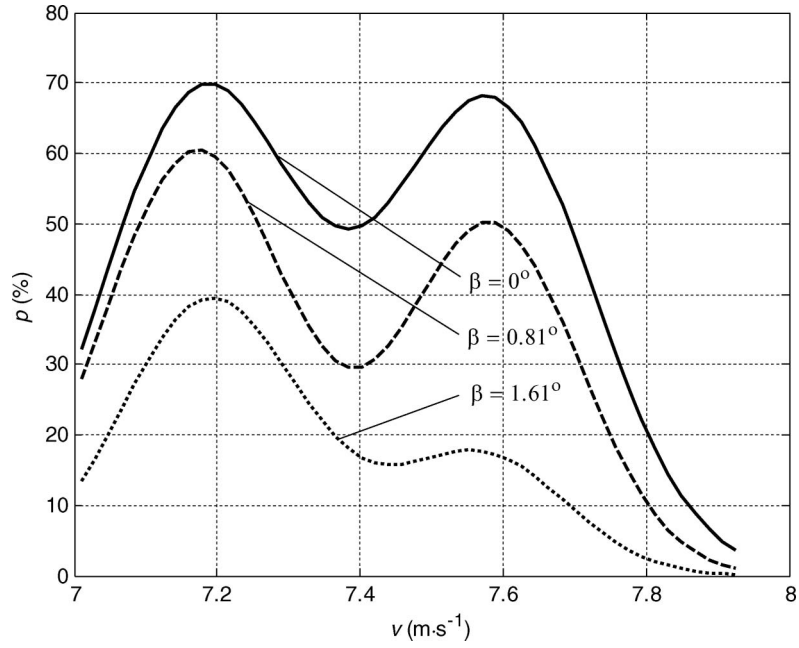

Figure 11. Probability of a successful shot versus desired release speed for side angles of $\beta = 0°$, 0.81°, and 1.62° ($\alpha = 52°$, $\omega = 3$ Hz).

size. This characteristic indicates that the effect mentioned by Hamilton and Reinschmidt (1997) resulting from the difference between the direction of a bounce when a ball hits the front of the ring (away from the centre of the ring) versus the back of the ring (toward the centre of the ring) is relatively small.

In Figure 11, the probability of a successful shot is shown as a function of the desired release speed for different values of β. We see that the increase in β affects the probabilities of bank shots more than hoop shots. This is because a bank shot travels farther and is therefore more offset than a hoop shot when it makes contact with the ring. As shown, the probabilities decrease with increasing β. Also, the optimal release speeds of the hoop shots and the optimal speeds of the bank shots change slightly with side angle.

The standard deviations of the side angle increase with launch angle according to $\sigma_\beta = k \sec \alpha$, where k is a constant (Hamilton and Reinschmidt, 1997). It follows that σ_β increases by 13% when α increases by 5° from $\alpha = 52°$. Therefore, not only does release speed increase with launch angle, but the standard deviation of the side angle also increases with launch angle. This strengthens the recommendation to shoot the ball in the neighbourhood of $\alpha = 52°$.

Conclusions

Our results permit us to make the following recommendations for successful free throw shooting: (1) The player should launch the ball with about 3 Hz of back spin. At 3 Hz, the ball undergoes about 3 revolutions before reaching the hoop. (2) The player should aim the ball towards the back of the ring so that the gap between the ball and the back of the ring as the ball passes through the ring is about 5 cm. (3) The player should launch the ball at about 52° to the horizontal. At 52°, the top of the ball's trajectory is just 4 cm below the top of the backboard. (4) The player should release the ball as high above the ground as possible, as long as this does not adversely affect his launch consistency. (5) The player should release the ball so it follows the line joining the player and the basket. (6) The player should launch the ball with a smooth body motion to obtain a consistent release speed.

Acknowledgement

The authors thank Ms. M. F. Adcock for generating a portion of the data.

References

Brancazio, P. J. (1981). Physics of basketball. *American Journal of Physics*, *49*, 356–365.

Hamilton, G. R., & Reinschmidt, C. (1997). Optimal trajectory for the basketball free throw. *Journal of Sports Sciences*, *15*, 491–504.

Huston, R. L., & Grau, C. A. (2003). Basketball shooting strategies – the free throw, direct shot and layup, *Sports Engineering*, *6*, 49–63.

International Basketball Federation (2006). *Official basketball rules* (available at: www.fiba.com).

Downloaded By: [Silverberg, Larry M.] At: 00:08 10 September 2008

National Basketball Association (2006). *2005–2006 official rule book* (available at: www.nba.com).

National Collegiate Athletic Association (2001). *NCAA men's and women's basketball rules and interpretations* (available at: www.ncaa.org).

Okubo, H., & Hubbard, M. (2006). Dynamics of the basketball shot with application to the free throw. *Journal of Sports Sciences*, *24*, 1303–1314.

Shibukawa, K. (1975). Velocity conditions of basketball shooting. *Bulletin of the Institute of Sport Science*, *13*, 59–64.

Silverberg, L. M., Tran, C. M., & Adcock, M. F. (2003). Numerical analysis of the basketball shot. *Journal of Dynamic Systems, Measurement, and Control*, *125*, 531–540.

Tan, A., & Miller, G. (1981). Kinematics of the free throw in basketball. *American Journal of Physics*, *49*, 542–544.

Downloaded By: [Silverberg, Larry M.] At: 00:08 10 September 2008